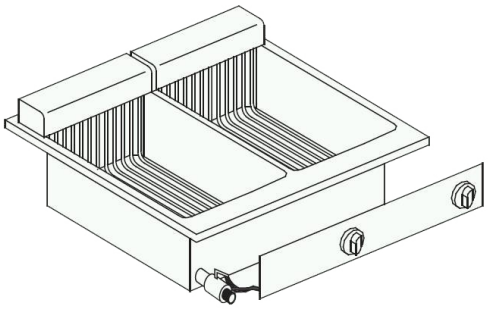

EL. FRYER 2X10 L

€3,870.00

SKU:	**7266.0075**

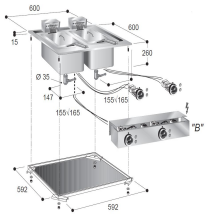

EAN code	6017429097034
Width (mm)	600
Depth (mm)	600
Height (mm)	356
Accessories included	2x mand en deksel en aftapkraan
Parcel ready	No
Gross Weight (kg)	40
Voltage (Volt)	400
Frequency (Hz)	50
Electrical power (kW)	11
Version	Electric
Capacity in units per hour	2x 10kg
Number of baskets	2
Installation Width (mm)	592
Installation depth (mm)	592
Net Capacity (Ltr)	2x10
Plug and play	No